Specialist range of Industrial Immersion Heaters with 2¼" BSP head.

Stainless Steel Type 316...Type US
Titanium...Type UT

The BEMCO range of specialist industrial immersion heaters is designed for use where standard heaters are unsuitable for many arduous conditions. They are suitable for both vertical and horizontal mounting.

SS316 Stainless Steel: 11mm diameter elements

Load kW	Number of Elements	Phases	Surface Rating		Immersed Length		Order Reference	Weights kg
			W/cm²	W/in²	mm	in		
1.5	1	1	3.7	24	585	23	US 23- 1.5/1	1.6
2.0	1	1	6.5	42	432	17	US 17- 2.0/1	1.5
3.0	1	1	7.3	47	585	23	US 23- 3.0/1	1.6
3.0	2	1	3.7	24	585	23	US 23- 3.0/2	2.1
4.0	1	1	13	84	432	17	US 17- 4.0/1	1.5
4.0	1	1	7.8	50	737	29	US 29- 4.0/1	1.7
4.0	2	1	6.5	42	432	17	US 17- 4.0/2	2.0
4.5	3	1 or 3	3.7	24	585	23	US 23- 4.5/3	2.6
6.0	2	1	7.3	47	585	23	US 23- 6.0/2	2.1
6.0	3	1 or 3	6.5	42	432	17	US 17- 6.0/3	2.5
8.0	2	1	13	84	432	17	US 17- 8.0/2	2.0
8.0	2	1	7.8	50	737	29	US 29- 8.0/2	2.4
9.0	3	1 or 3	7.3	47	585	23	US 23- 9.0/3	2.6
12.0	3	1 or 3	13	84	432	17	US 17- 12.0/3	2.5
12.0	3	1 or 3	7.8	50	737	29	US 29- 12.0/3	3.0

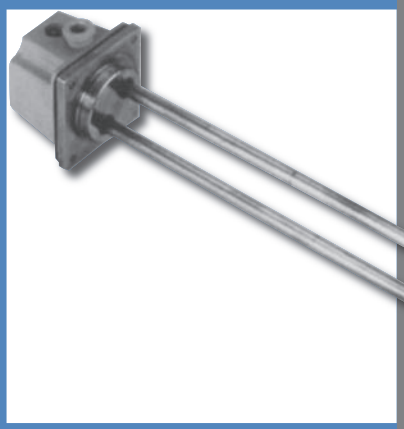

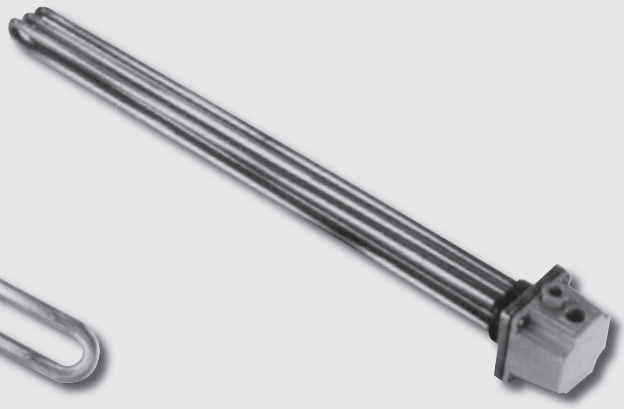

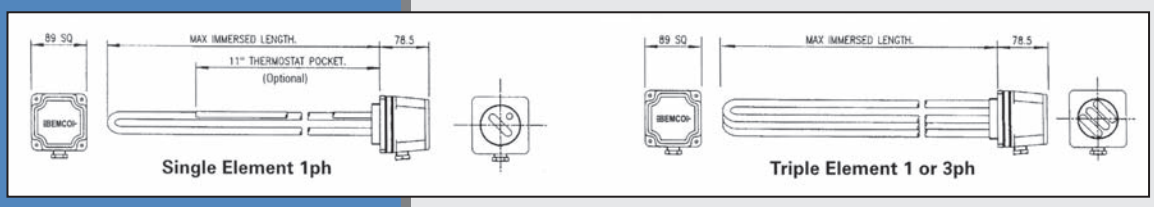

BEMCO
Globemarket LTD t/a BEMCO > 11/12 Carver Street, Birmingham B1 3AS > England
Tel: 0044 (0)121 236 5868 > Fax: 0044 (0)121 236 8211
www.bemco.uk.com

U-Type Heaters

ELECTROPLATING AND TITANIUM ANODISING JIGS • VAT HEATERS • TITANIUM ANODE BASKETS • ANODE BAGS • PT/TI ANODES • PVC COATINGS • TANKS • HEATING/COOLING COILS AND PANELS

Titanium: 11mm diameter elements

Load kW	Number of Elements	Phases	Surface Rating		Immersed Length		Order Reference	Weights kg
			W/cm²	W/in²	mm	in		
2.0	1	1	6.5	42	432	17	US 17- 2.0/1	1.5
3.0	1	1	7.3	47	585	23	US 23- 3.0/1	1.6
4.0	1	1	7.8	50	737	29	US 29- 4.0/1	1.7
4.0	2	1	6.5	42	432	17	US 17- 4.0/2	2.0
6.0	2	1	7.3	47	585	23	US 23- 6.0/2	2.1
6.0	3	1 or 3	6.5	42	432	17	US 17- 6.0/3	2.5
8.0	2	1	7.8	50	737	29	US 29- 8.0/2	2.5
9.0	3	1 or 3	6.5	42	585	23	US 23- 9.0/3	2.7
12.0	3	1 or 3	7.8	50	737	29	US 29- 12.0/3	3.0

Specification

Head
2¼" BSP male thread in stainless steel type 316 (US) or titanium (UT)

Voltage
230v single phase, 400 volt
3 phase star connection to give full kW ratings.

Elements
High quality wire surrounded by mineral insulating powder encased by stainless steel type 316 or titanium with a 38mm dead leg on wet side of head.

Earth
An internal earth terminal is fitted to the heater plate

Operating pressure and temperature
Working temperature is up to 150°C (300°F) maximum. Heaters have a maximum working pressure of (150 psi) 10 bar. Higher working pressures made to order.

Thermostat
Thermostat supplied at extra cost. Customer to specify temperature range required.

Cover
High impact ABS plastic weatherproof terminal box to IP65 is provided as standard

Gasket
Supplied asbestos free.

Options

Optional extras available:
Mounting flanges, 2¼" BSP weld sockets.

N.B The user must check with the chemical supplier for suitability of sheath for heating the liquid in the vat.

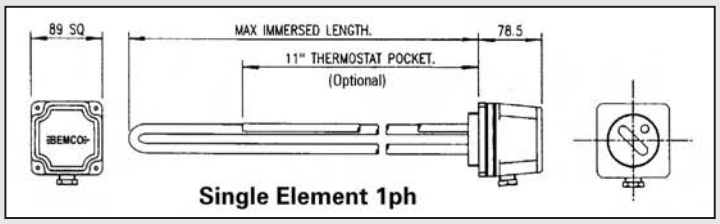

Single Element 1ph

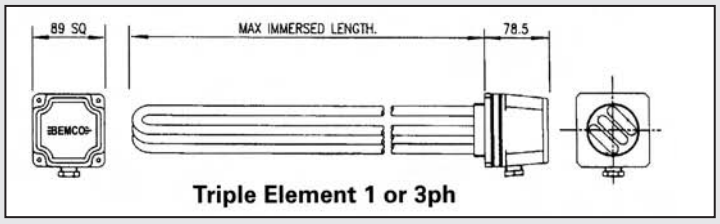

Triple Element 1 or 3ph

Globemarket Ltd t/a BEMCO, is committed to a policy of continuous improvement and development. We therefore reserve the right to alter specifications at any time.

ELECTROPLATING AND TITANIUM ANODISING JIGS • VAT HEATERS • TITANIUM ANODE BASKETS • ANODE BAGS • PT/TI ANODES • PVC COATINGS • TANKS • HEATING/COOLING COILS AND PANELS

BEMCO
Globemarket LTD t/a BEMCO > 11/12 Carver Street, Birmingham B1 3AS > England
Tel: 0044 (0)121 236 5868 > Fax: 0044 (0)121 236 8211
www.bemco.uk.com